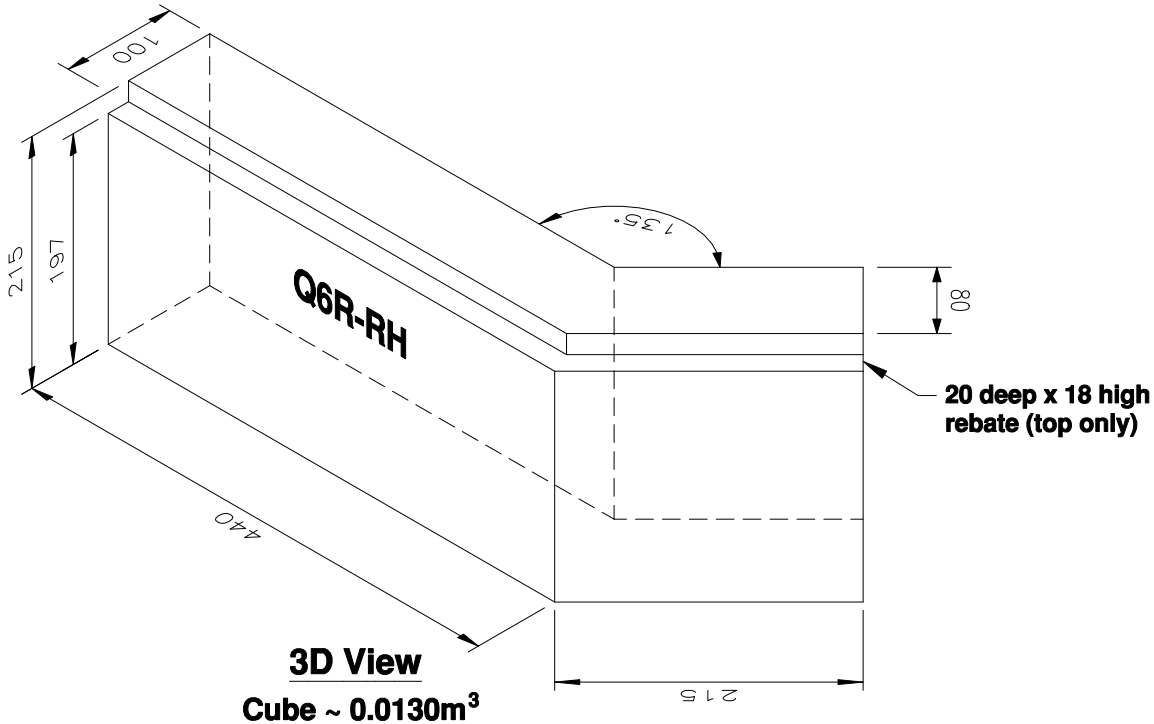

3D View

Cube ~ 0.0130m³
Weight ~ 27kg

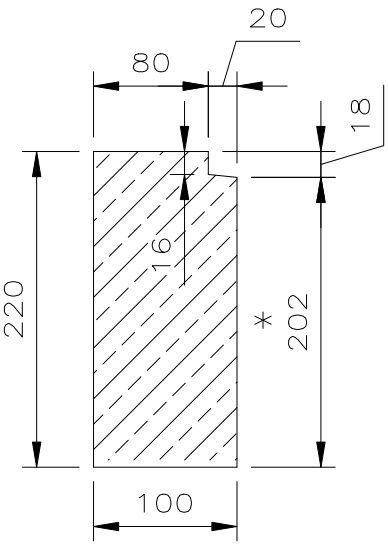

Section

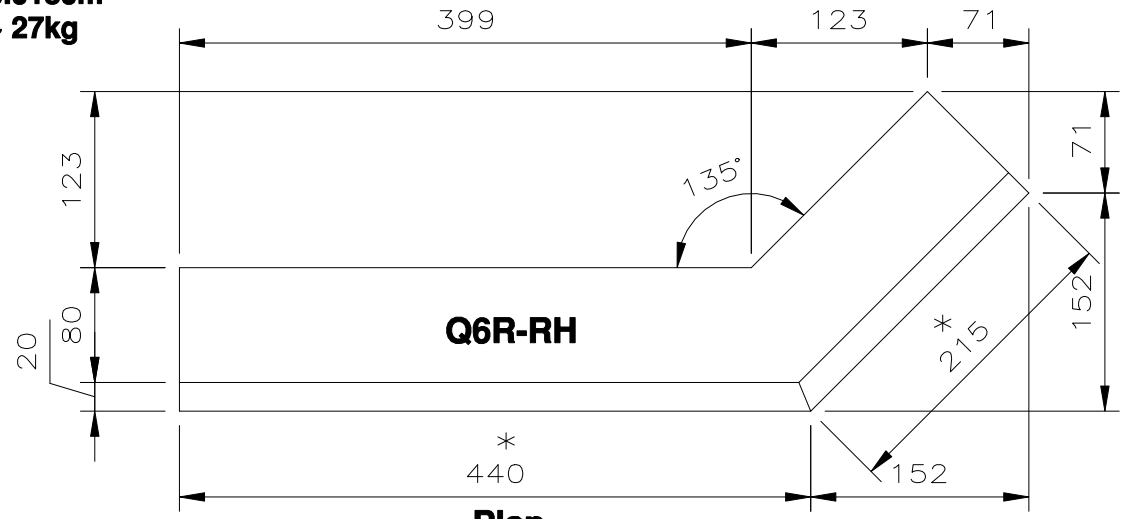

Plan

∗ denotes SEEN FACES

Refer any omissions or errors to Forticrete Ltd, do not scale from the drawing, use only given dimensions. (01909 775000)

NO PROVISION HAS BEEN MADE FOR SITE HANDLING THESE UNITS. FORTICRETE SHOULD BE INFORMED OF ANY LIFTING REQUIREMENTS.

STONE UNITS MAY INCLUDE LIFTING SOCKETS FOR HANDLING PURPOSES DURING MANUFACTURE. IT SHOULD NOT BE ASSUMED THESE ARE SUITABLE FOR USE ON SITE.

SITE HANDLING AND INSTALLATION OF STONEWORK IS THE RESPONSIBILITY OF THE PRINCIPAL CONTRACTOR AND SHOULD BE GIVEN EARLY CONSIDERATION IN CONSULTATION WITH AN ENGINEER. UNIT WEIGHTS ARE GENERALLY SHOWN ON DRAWINGS ISSUED BY FORTICRETE, OR ARE AVAILABLE ON REQUEST.

ALL RESTRAINT/FIXING REQUIREMENTS ARE TO BE SPECIFIED BY A STRUCTURAL ENGINEER.

THIS DETAIL IS SUPPLIED FOR INFORMATION ONLY AND MUST BE APPROVED BY THE ARCHITECT.

APPROVAL REQUEST	
APPROVED, PROCEED AS DRAWN.	
APPROVED, PROCEED SUBJECT TO NOTES	
AMEND DETAILS AND RE-SUBMIT	
APPROVED BY:	
DATE:	

Rev:	Date:	Drawn:	Description:
B	Mar 09	MIM	Section details added.
A	Feb 09	MIM	Cube added.

REVISIONS

FORTICRETE®
innovators in masonry™

Job Title:
STANDARD COMPONENT DRAWINGS

Drawing Title:
Q6R-RH REBATED QUOIN DETAILS

Drawn: MIM	Date: FEB '09	Scale: 1:5
Drawing No: CD/39		Revision: B

The information shown on this drawing is sent in confidence and must not be used for any other purpose other than that for which it is supplied.

Copyright ©
Forticrete Ltd.